DATE	REV	ECN	APP'D BY
2/4/2021	A0		JE
4/23/2021	A1	11739	GL

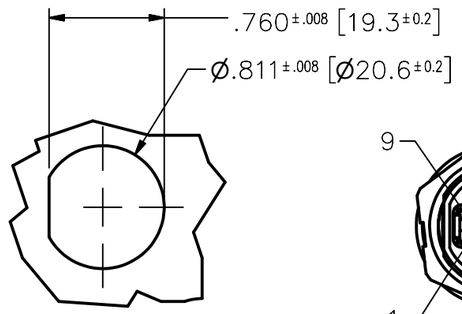

RECOMENTED PANEL OPENING

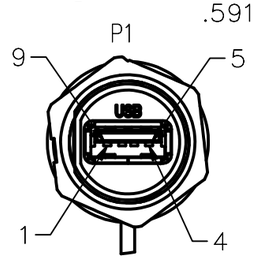

VIEW A–A
SCALE 1 : 1

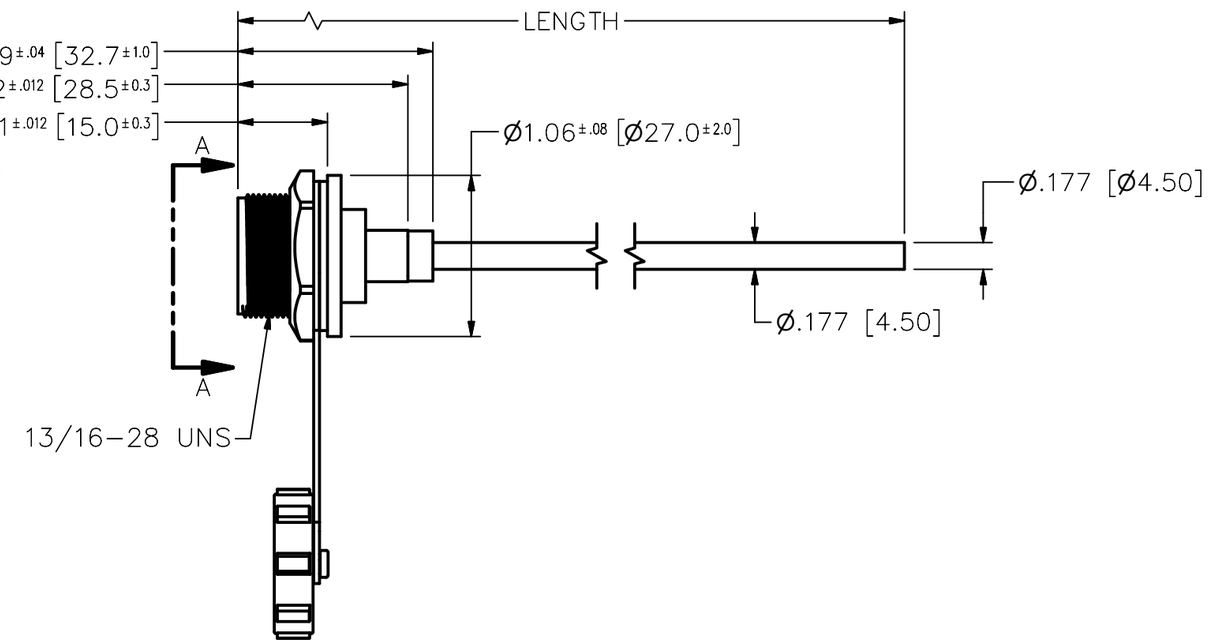

WIRE DIAGRAM		
P1	WIRE COLOR	P2
1	RED	
2	WHITE	
3	GREEN	
4	BLACK	
5	BLUE	
6	YELLOW	
7	GND	
8	VIOLET	
9	ORANGE	
10	SHIELD BRAID	

NOTES:

1. PACKAGING:
   a. EACH CABLE ASSEMBLY TO BE INDIVIDUALLY BAGGED
2. MATERIAL:
   a. CABLE: USB 3.0 A/F UL2725 1P+(30AWG*1P+D+AL)*2+26AWG*2C+AL+B, PVC COVER, COLOR BLACK.
   b. USB 3.0 A/F
      – INSULATOR: PPT UL 94V–0, COLOR BLUE
      – METAL SHELL: COPPER ALLOY, NI PLATING
      – CONTACTS: COPPER ALLOY Au FLASH ON CONTACT AREA OVER Ni
   c. OVERMOLD : PVC UL 94V–0 COLOR BLACK
   d. HOUSING: PA66 UL94V–0 COLOR BLACK
   e. GASKET: SILICONE, COLOR BLACK
   f. SCREW NUT: PA66 UL94V–0 COLOR BLACK
   g. DUST CAP: PA66 UL94V–0 COLOR BLACK
   h. DUST CAP GASKET: SILICONE
3. SPECIFICATIONS:
   a. WIRE SPEIFICATION 26/30 AWG
   b. NUMBER OF CONTACTS: 9
   c. TEMPERATURE RANGE –40~C~ 80~C
   d. FLAMMABILIYY RATING: UL94–V0
   e. PROTECTION LEVEL: IP67
   f. WITHSTANDING VOLTAGE: 1000V/1 MIN
   g. CURRENT RATING: 1.5A
   h. CONTACT RESISTANCE: ≤ 30MΩ
   li. NSULATION RESISTANCE: 100MΩ DC500V

PART NUMBER STRUCTURE

67U3BD–xxx–K

- COLOR: K=BLACK
- LENGTH: 003=3 FEET ±1.6" ; 006=6 FEET ±2.4"
- P 2: D= BLUNT
- P 1: B= USB IP67 FEMALE
- CATEGORY: 3=3.0
- CONNECTOR TYPE: U=USB
- FAMILY: 67=IP67

RoHS

THIRD ANGLE PROJECTION

DO NOT SCALE DRAWING

DRAWING IS SUBJECT TO CHANGE WITHOUT NOTICE

DIMENSIONS: INCHES [METRIC]

UNLESS OTHERWISE SPECIFIED TOLERANCES ARE ±.005 [0.13] ANGLES ARE ± 1°

SHEET NO. 1 OF 1

stewart CONNECTOR a bel group

11118 Susquehanna Trail South
Glen Rock, PA 17327-9199
(717) 235-7512
http://www.stewartconnector.com

TITLE: USB 3.0 TYPE A FEMALE (CIRCULAR COUPLING) TO BLUNT

THIS DRAWING AND THE SUBJECT MATTER SHOWN THEREON ARE CONFIDENTIAL AND THE PROPRIETARY PROPERTY OF STEWART CONNECTOR AND SHALL NOT BE REPRODUCED, COPIED, OR USED IN ANY MANNER WITHOUT PRIOR WRITTEN CONSENT OF STEWART CONNECTOR. THIS PRODUCT MAY BE PROTECTED BY ONE OR MORE OF THE FOLLOWING US PATENTS: 5791942 6217391 6368159 6419526 6602097 687722 6964587 7048590 7086909 7568950 7686650 OTHER PATENTS MAY BE PENDING.

DRN BY: G. LUCAS	DATE: 1/20/2021
APPD BY: JE	DATE: 2/4/2021
DWG NO: CT999241	REV. A1