DATE	REV	ECN	APP'D. BY
11/6/2024	A0	12463	BR
1/17/2025	A1	12490	JE

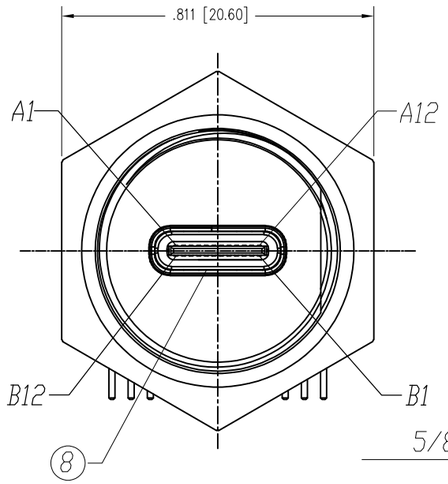

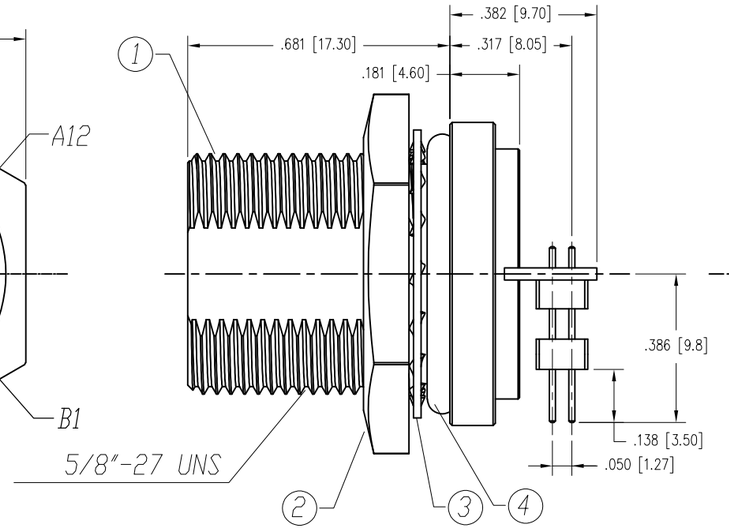

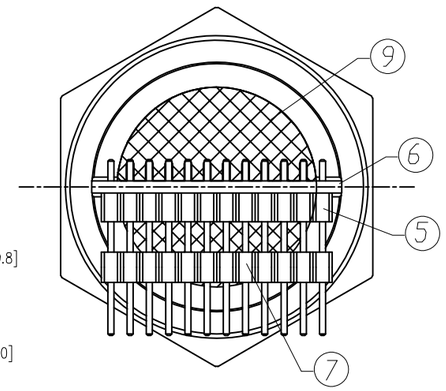

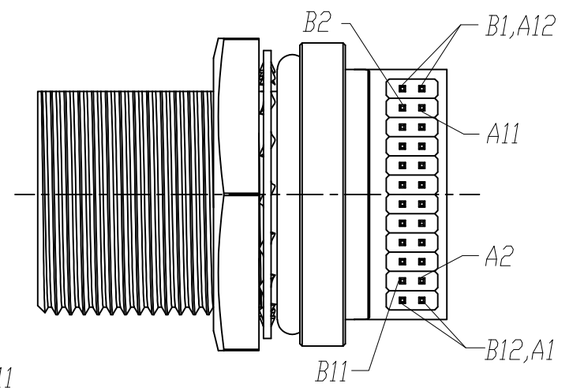

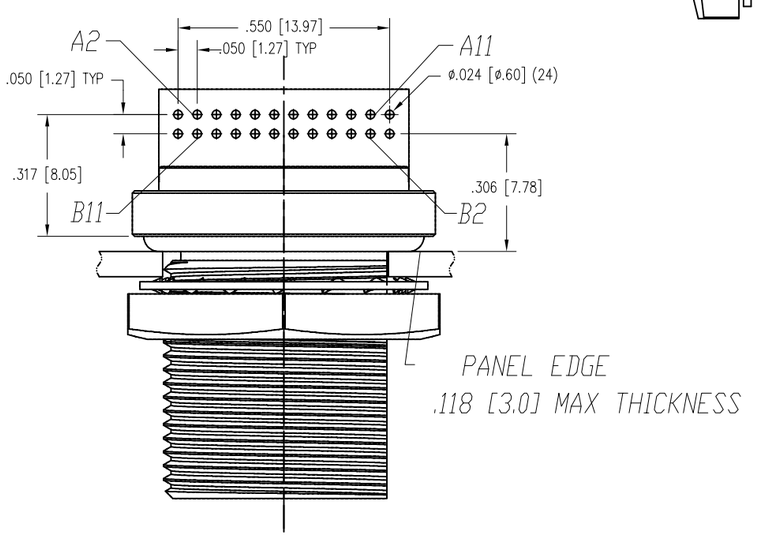

PCB Layout

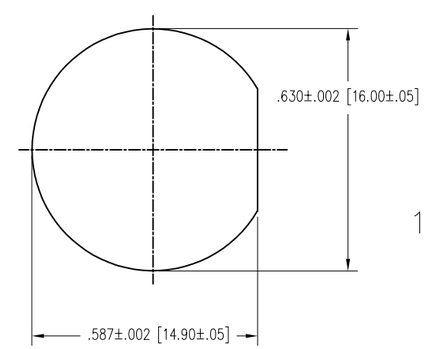

Panel Cut-Out

NOTES:

1. MATERIAL
   SEE CHART

2. ELECTRICAL
   OPERATING VOLTAGE: 20V MAX.
   CURRENT RATING: 1.0 AMPS MAX.
   CONTACT RESISTANCE: 80 mΩ MAX.
   INSULATION RESISTANCE: 100MΩ MIN. @100VDC
   DIELECTRIC WITHSTANDING VOLTAGE: 100VAC/ 1 MINUTE

3. ENVIRONMENTAL
   TEMPERATURE RANGE: −30° TO +80°C
   MATING CYCLES: 10,000 INSERTIONS
   INGRESS PROTECTION RATING: IP67

4. CONNECTOR IS FULLY COMPATIBLE WITH USB TYPE−C
   3.2 CONNECTOR SPEC.

5. JAM NUT TORQUE 11.3−13IN−LB [13−15KG−CM]

9	GLUE		1
8	USB TYPE 3.2	THERMOPLASTIC/METAL SHIELD COPPER ALLOY, 1μ" Au	1
7	HOLD	EPDM	1
6	PCB	FR−4	1
5	PIN HEADER	THERMOPLASTIC/ COPPER ALLOY, Au FLASH	1
4	O−RING	EPDM	1
3	WASHER	SUS	1
2	JAM NUT	C3604−DB	1
1	HOUSING	C3604−DB	1
PART NUMBER SS−52400−007			

THIRD ANGLE PROJECTION

DRAWING IS SUBJECT TO CHANGE WITHOUT NOTICE

UNLESS OTHERWISE SPECIFIED
DIMENSIONS INCHES [METRIC]
TOLERANCES ARE:
ANGLES ± 5°
.X [X.] ±.020" [±0.50]
.XX [.X] ±.012" [±0.30]
.XXX [.XX] ±.008" [±0.20]
DO NOT SCALE DRAWING

SHEET NO. 1 OF 1

RoHS

stewart CONNECTOR a bel group
11118 Susquehanna Trail South
Glen Rock, PA 17327−9199
(717) 235−7512
http: //www.stewartconnector.com

TITLE: USB TYPE C RIGHT ANGLE BULKHEAD RECEPTACLE, IP67 RATED, 5/8−27 UNS THREAD

THIS DRAWING AND THE SUBJECT MATTER SHOWN THEREON ARE CONFIDENTIAL AND THE PROPRIETARY PROPERTY OF STEWART CONNECTOR AND SHALL NOT BE REPRODUCED, COPIED, OR USED IN ANY MANNER WITHOUT PRIOR WRITTEN CONSENT OF STEWART CONNECTOR. ONE OR MORE U.S. PATENTS MAY APPLY TO THIS PRODUCT. FOR DETAILS, PLEASE VISIT: HTTP: //BELFUSE.COM/STEWART/STEWART_PATENTS/

DRN BY: JE		DATE 10−22−24	
APPD BY: BR		DATE 11/5/2024	
DWG NO. CT520018			REV. A1

AutoCAD