DATE	REV	REVISION CHANGES	ECN	APP'D BY
09/19/18	A0	AS DRAWN	-	ADB

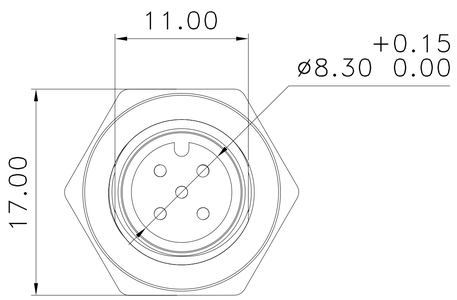

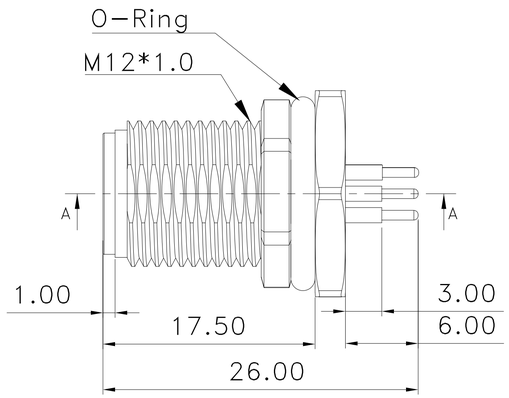

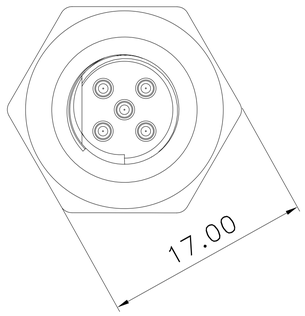

NOTES:

1. CONNECTOR MATERIALS:
   HOUSING: THERMOPLASTIC UL94 V-0
   CONTACTS/SHIELD: COPPER ALLOY
   O-RING MATERIAL: SILICONE UL94 V-0
   EPOXY POTTING COMPOUND IN REAR CAVITY
   SHIELD PLATING: NICKEL
   CONTACT PLATING: SELECTIVE GOLD (1 uIN) OR EQUIVALENT IN THE CONTACT AREA
2. FOR PRODUCT SPECIFICATIONS SEE PR039-01
3. DIMENSIONS AND TOLERANCES COMPLY WITH IEC 61076-2-101 STANDARD.
4. THE SUGGESTED PANEL OPENING IS INTENDED TO GIVE USER THE ABILITY TO HAVE REASONABLE JACK/PANEL CLEARANCES
5. CODING: A-STANDARD
6. 1 uIN GOLD PLATING ON PCB MOUNT PINS
7. CURRENT RATING: 4 AMPS MAX
8. INSULATION RESISTANCE: 100 MOHMS MIN @ 500 VDC
9. DEGREE OF PROTECTION: IP67
10. TEMPERATURE RANGE: -20°C TO +85°C
11. MATING CYCLES: 100 INSERTIONS

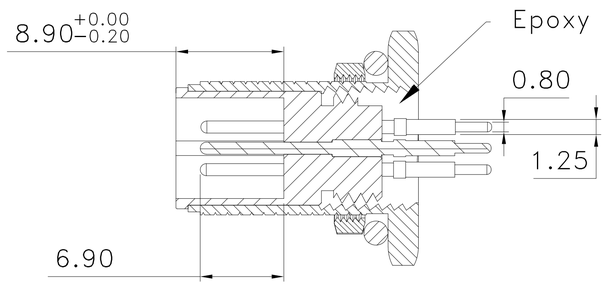

SECTION A-A

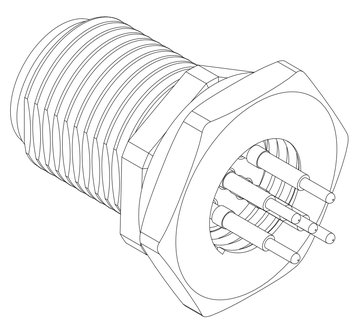

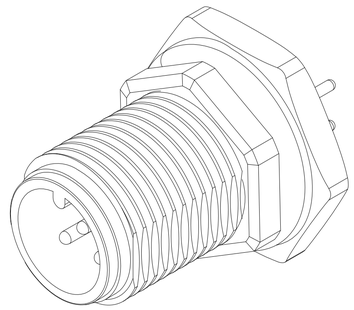

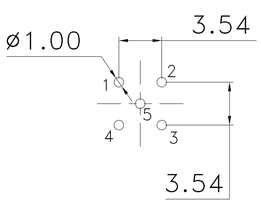

PCB LAYOUT (COMPONENT SIDE)

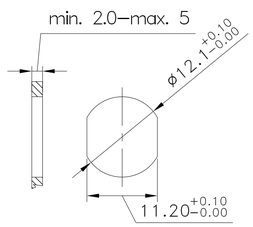

RECOMMENDED PANEL CUT-OUT

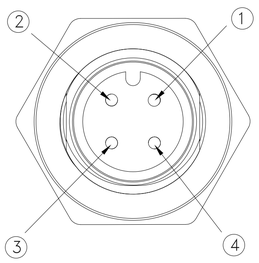

A-CODE (4 PIN)

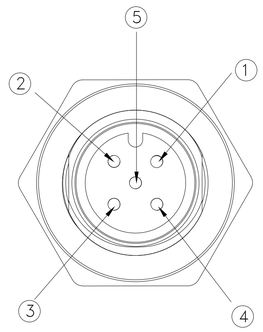

A-CODE (5 PIN)

5	SS-12000-004
4	SS-12000-003
NUMBER OF CONTACTS	PART NUMBER

THIRD ANGLE PROJECTION

DO NOT SCALE DRAWING
DRAWING IS SUBJECT TO CHANGE WITHOUT NOTICE

DIMENSIONS: METRIC
UNLESS OTHERWISE SPECIFIED TOLERANCES ARE ±0.13 [.005] ANGLES ARE ± 1°

SHEET NO. 1 OF 1

stewart connector
a bel group
11118 Susquehanna Trail South
Glen Rock, PA 17327-9199
(717) 235-7512
http://www.stewartconnector.com

TITLE: Rear Panel Mount Receptacle, M12 A-Code, Male

THIS DRAWING AND THE SUBJECT MATTER SHOWN THEREON ARE CONFIDENTIAL AND THE PROPRIETARY PROPERTY OF STEWART CONNECTOR AND SHALL NOT BE REPRODUCED, COPIED, OR USED IN ANY MANNER WITHOUT PRIOR WRITTEN CONSENT OF STEWART CONNECTOR. ONE OR MORE U.S. PATENTS MAY APPLY TO THIS PRODUCT. FOR DETAILS, PLEASE VISIT: HTTP://BELFUSE.COM/STEWART/STEWART_PATENTS/

RoHS

DRN. BY:	BTS	DATE	08/23/18
APPD BY:	ADB	DATE	09/19/18
DWG NO.	CT120002	REV.	A0

AutoCAD A1 Metric